USER MANUAL

Airdata Indicator 2

Version 2.0



November 2026

www.lxnav.com

1 Important notices 4
1.1 Limited warranty 4
2 Packing list 6
3 ADI2 basics 7
3.1 The ADI2 at a glance 7
3.1.1 ADI2 features 7
3.1.2 Interfaces 7
3.1.3 Technical data 8
4 Wiring and static ports 10
4.1 Wiring 10
4.2 Pinout 10
4.3 10
4.4 Pressure ports connections 11
5 Installation 12
5.1 Parts affected 12
5.1.1 Parts removed 12
5.1.2 Parts installed 13
5.2 Prerequisites 13
5.3 Installation Process 13
5.4 Post Installation Configuration, Checkout, and Documentation 14
5.5 Cut-out 15
6 Test of the pitot-static system 16
6.1 Static system leak test 16
6.2 Static system test 16
6.3 Pitot system leak test 16
6.4 Pitot system test 17
7 Compass 18
7.1 Technical Data 18
7.2 Installation 18
7.2.1 Location requirement 18
7.2.2 Connecting 18
7.2.3 Calibration 19
7.2.4 Troubleshooting 20
8 System description 21
8.1 Rotary push knob 21
8.2 Switching on the unit 21
8.3 User input 21
8.3.1 Navigating menu and dialogs 22
8.3.2 Radio on/off button 22
8.3.3 Selection control 22
8.3.4 Spin control 23
8.3.5 Slider control 23
8.3.6 Text controls 23
9 Operating modes 24
9.1 Main screen 24
9.2 QNH changing 25
9.3 Battery indication 25
9.3.1 Power loss in flight 25
9.4 Setup mode 26
9.4.1 Display 26
9.4.2 Layout 27

9.4.2.1 Upper and lower field 27
9.4.2.2 Center 28
9.4.2.3 Ring 28
9.4.3 Installation menu 28
9.4.3.1 Wi-Fi 29
9.4.3.2 Units 30
9.4.3.3 Speeds 30
9.4.3.4 Scale type 32
9.4.3.5 Scale min. speed 33
9.4.3.6 Scale origin 33
9.4.3.7 TAS method 33
9.4.3.8 Vario filter 33
9.4.3.9 Temperature offset 34
9.4.3.10 Compass calibration 34
9.4.3.11 Altitude offset 34
9.4.3.12 Altitude step 34
9.4.4 Password 34
9.5 About 35
10 Instructions for continued Airworthiness (ICA) 36
10.1 Occurrence reporting 36
11 Revision history 37

1 Important notices

The Airdata indicator 2 (ADI2) is not an ETSO-approved device. However, it can be installed in an aircraft under STC 10088573 to substitute airspeed indicator and/or altimeter mandated by the flight- and/or maintenance manual of the airplane.
It is ultimately the pilot's responsibility to ensure that the aircraft is being flown in accordance with the manufacturer's aircraft flight manual. Aircraft operation is limited to VFR/day operation. The operation of the aircraft is not permitted, if either the ADI2 or the backup instrument is not operative.
The ADI2 must be installed in accordance with this manual by a competent and qualified personnel using standard maintenance procedures.

Information in this document is subject to change without notice. LXNAV reserves the right to change or improve their products and to make changes in the content of this material without obligation to notify any person or organization of such changes or improvements.

A Yellow triangle is shown for parts of the manual which should be read carefully and are important for operating the Airdata indicator.



Notes with a red triangle describe procedures that are critical and may result in loss of data or any other critical situation.



A bulb icon is shown when a useful hint is provided to the reader.

1.1 Limited warranty

This LXNAV product is warranted to be free from defects in materials or workmanship for two years from the date of purchase by the Original Customer — the first end user to purchase the product — but in no case starting later than twelve months after the date of LXNAV's invoice to the authorized dealer or distributor. This start-date rule applies to this voluntary warranty only and does not affect any statutory period running from delivery to the consumer.
Within the warranty period LXNAV will, at its discretion, repair or replace any component that fails in normal use, at no charge for parts or labor. Defects in firmware are corrected free of charge by firmware updates installed by LXNAV or authorized personnel (the ADI2 software is not field loadable); LXNAV publishes firmware updates for at least five years from a product's end-of-sale date, meaning the date on which LXNAV ceases to supply it, and in any event for the duration of the warranty period.
Where LXNAV repairs a product, the repaired fault and the parts replaced during that repair are warranted for six months from the date of dispatch, or for the remainder of the original warranty period, whichever is longer. A replacement product carries the remainder of the original warranty period, or six months from dispatch, whichever is longer.
This warranty does not cover failures due to abuse, misuse, accident, incorrect installation or wiring, damage from conditions outside the product's published specifications, or damage caused by alteration or repair by anyone other than LXNAV or an LXNAV-authorized service center.
Contact LXNAV or your dealer before returning any product. LXNAV will first try to resolve the fault with you remotely, for example with a firmware update installed by authorized personnel; if the product does need to come back, you will receive an RMA number together with LXNAV's

instructions for transport to LXNAV. Enclose a copy of the purchase invoice and a description of the problem. Back up your settings, logs and other stored data first — repair or replacement may erase them. If you are sending the product from outside the European Union, declare it as goods sent temporarily for repair and return to sender, quoting the RMA and serial number — otherwise duty and VAT may be charged on the full value of the product.

Nothing in this warranty excludes or limits LXNAV's liability for death or personal injury, for liability under applicable product liability law, or for any other liability that cannot lawfully be excluded. Subject to that: ANY IMPLIED WARRANTIES ARE LIMITED IN DURATION TO THE DURATION OF THIS WRITTEN LIMITED WARRANTY, AND LXNAV SHALL NOT BE LIABLE FOR ANY INCIDENTAL, SPECIAL, INDIRECT OR CONSEQUENTIAL DAMAGES, OR FOR LOSS OF USE, LOSS OF DATA OR COST OF AIRCRAFT OR VESSEL DOWNTIME.

Some States do not allow limitations on how long an implied warranty lasts, so the above limitation may not apply to you. Some States do not allow the exclusion or limitation of incidental or consequential damages, so the above limitation or exclusion may not apply to you. This warranty gives you specific legal rights, and you may also have other rights which vary from State to State.

This warranty is given in addition to, and does not affect, your statutory rights. If you are a consumer, you are entitled by law to free remedies from the seller if the goods do not conform to the contract of sale.

Australian customers: Our goods come with guarantees that cannot be excluded under the Australian Consumer Law. You are entitled to a replacement or refund for a major failure and compensation for any other reasonably foreseeable loss or damage. You are also entitled to have the goods repaired or replaced if the goods fail to be of acceptable quality and the failure does not amount to a major failure.

Full warranty terms, including regional annexes for the EU, USA, UK, Australia and New Zealand: www.lxnav.com/warranty. A free printed copy is available on request from LXNAV.

LXNAV d.o.o., Kidričeva ulica 24, 3000 Celje, Slovenia · +386 592 33 400 · info@lxnav.com · www.lxnav.com

October 2026

© 2026 LXNAV. All rights reserved.

2 Packing list

- Airdata indicator (ADI2)
- Power supply cable
- OAT probe
- Declaration of conformity

3 ADI2 basics

3.1 The ADI2 at a glance

The Airdata indicator 2 or ADI2 is standalone unit designed to indicate airspeed, altitude and outside air temperature. It is capable of measuring the pitot- and static pressure digitally using calibrated sensors.
The unit has standard dimensions that will fit into the instrument panel with an opening of 57 mm diameter or 80 mm diameter.
The values are displayed on a sunlight readable display. The display can be configured using a password protected installation menu. It shall be configured showing the applicable colored ARCs as per AFM on the display. Additional numerical values can be configured as per convenience. One rotary push knob is used to adjust the QNH and to enter other settings while on the ground.

3.1.1 ADI2 features

- Airspeed sensor: 12 bit, 0 to 50 hPa, (325 km/h-175 kts) with resolution less than 0.1 km/h
- Optionally you can order ADI2 with 100 hPa sensor (450 km/h – 249 kts)
- Barometric sensor: 24 bit, 10 hPa - 1200 hPa, 10 cm resolution.
- An extremely bright 2.1" round color display readable in all sunlight conditions with the ability to adjust the backlight.
- Rotary push knob for operation
- 57 mm (2.25”) or 80 mm (3.15”) version

3.1.2 Interfaces

- Wi-Fi – just to be used by manufacturer
- CAN for compass module

3.1.3 Technical data

Ranges:

- IAS range: 325 km/h (175 kts)
- Altitude range: 9000 m (29500 ft)

ADI57

- Power input 8-32 V DC
- Consumption 90-140 mA@12 V
- Dimming input 0-24 V (Not in use!)
- Weight 195 g
- Dimensions: 57 mm (2.25”) cut-out
- 62 x 62 x 40 mm

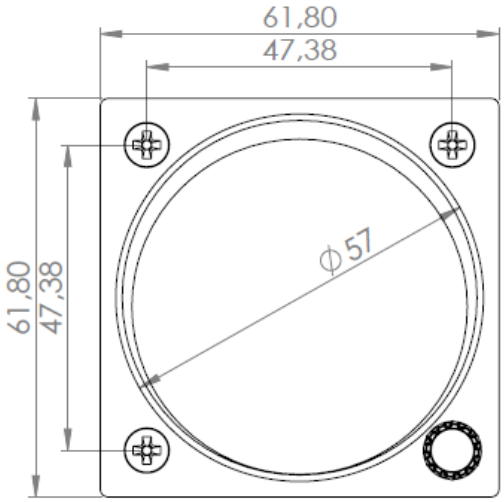

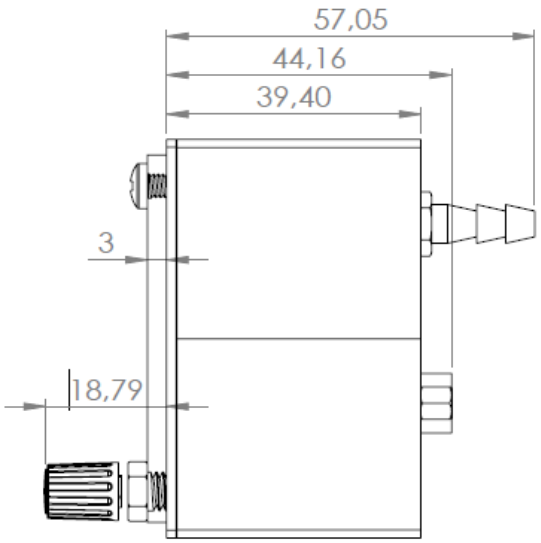

ADI80

- Power input 8-32 V DC
- Consumption 90-140 mA@12 V
- Dimming input 0-24 V (Not in use!)
- Weight 315 g
- Dimensions: 80 mm (3.15”) cut-out
- 80 x 81 x 45 mm

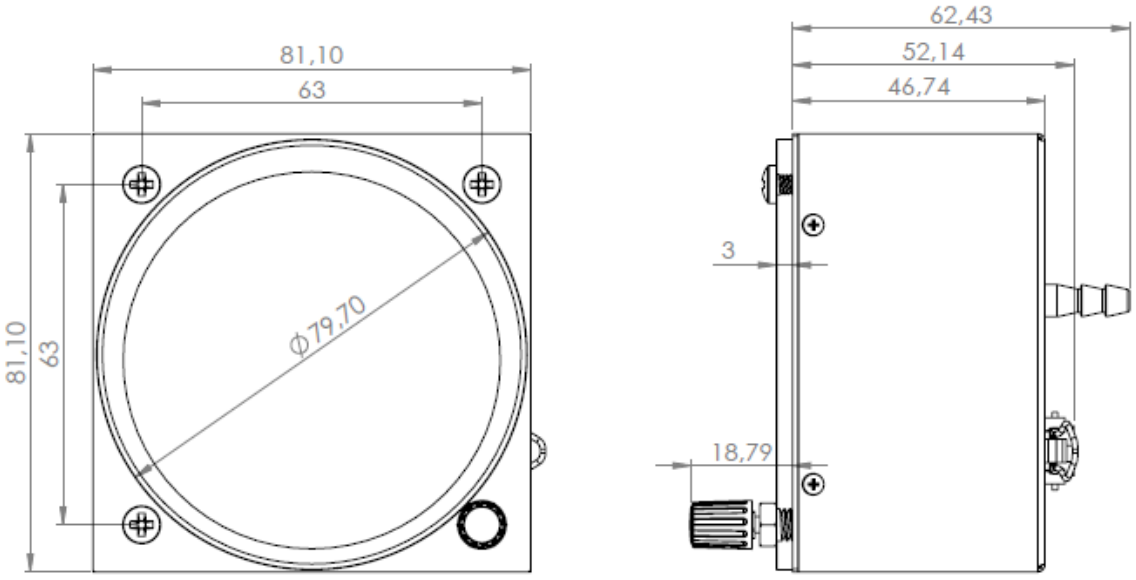

Recommended fuse for ADI2 is **1A**

4 Wiring and static ports

4.1 Wiring

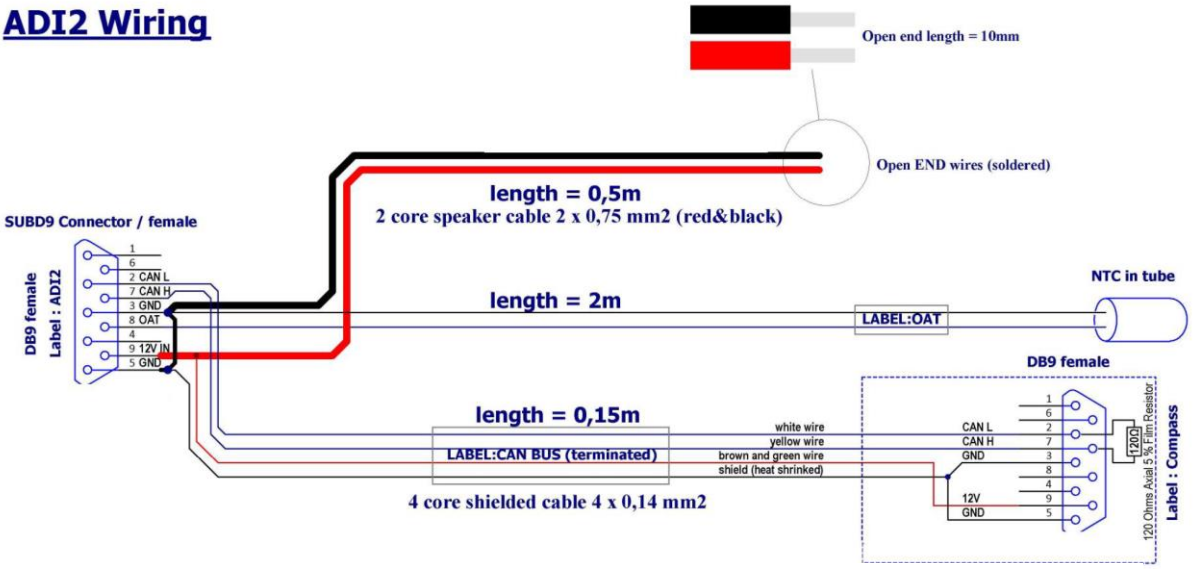

4.2 Pinout

Pin Number	Description
1	Not in use
2	CAN_L compass module
3	Ground
4	N/C
5	Shield/Ground
6	N/C
7	CAN_H compass module
8	OAT
9	Power supply

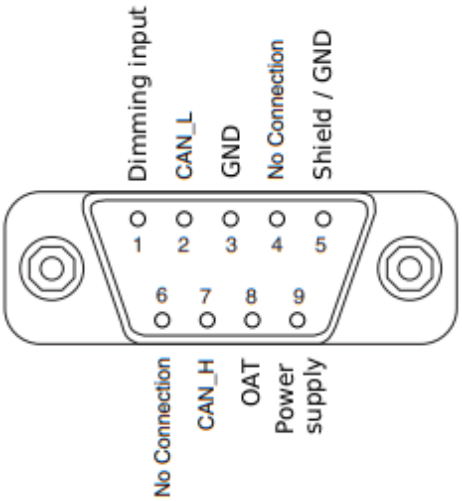

4.3

4.4 Pressure ports connections

Two ports are on the back of Airdata indicator **P_{static}** static pressure port and **P_{total}** pitot or total pressure port.

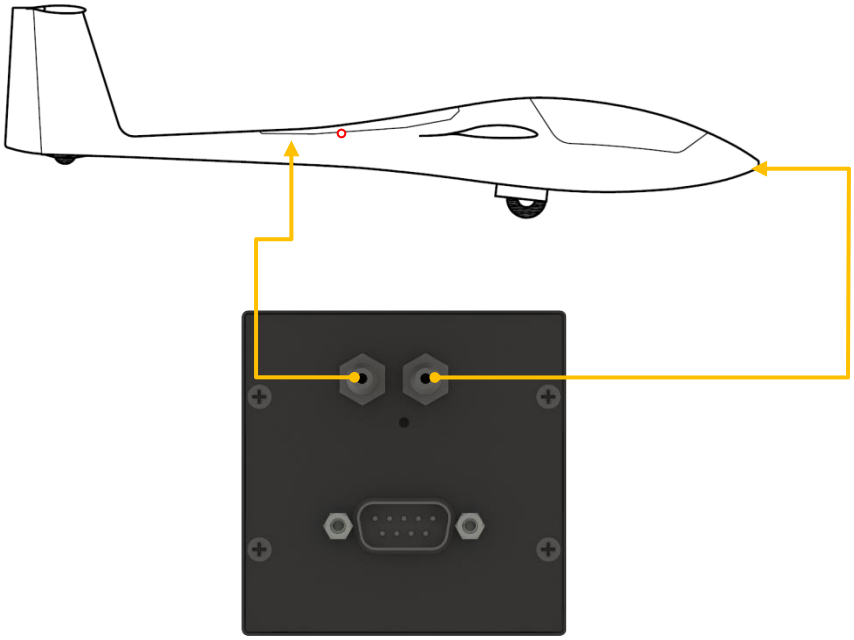

5 Installation

The ADI2 requires a standard 57 mm or 80 mm cut-out. On the back it is fitted with two pressure ports for total pressure and static pressure.
OAT (outside air temperature) probe that comes with the device must be properly installed to reach outside air. When used to replace an outside air temperature (OAT) thermometer required by the Flight or Maintenance Manual, the probe must be installed in the same location as the sensor of the thermometer being replaced.
More about pinout and pressure ports connections is available in chapter 4: *Wiring and static ports.*

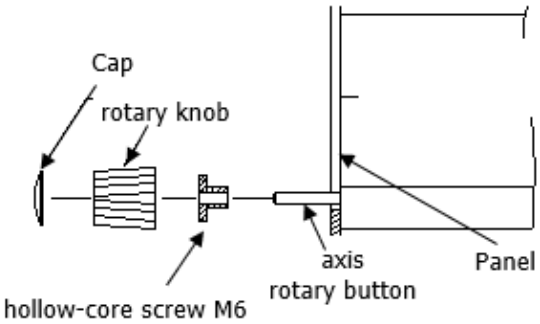

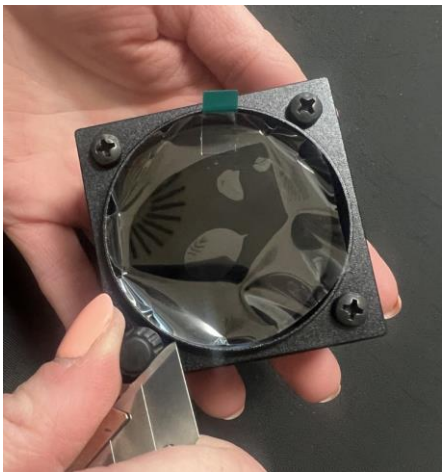

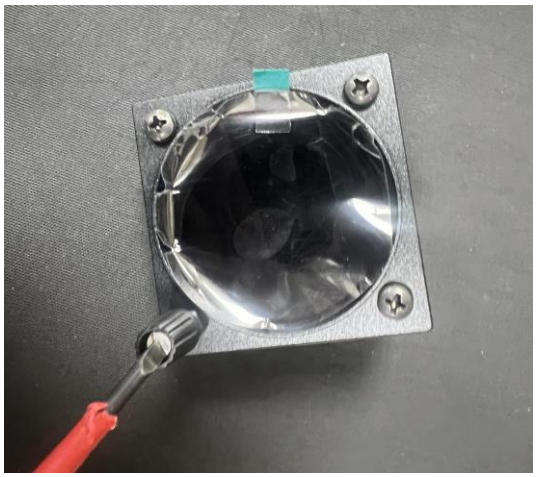

Remove the rotary knob cap with a knife or flat screw driver, then hold knob and unscrew it. Remove the remaining screw and the M6 threaded nut. Install the ADI2 into the panel and screw back all screws, nut and knob. Ensure that between the knob and the panel there is sufficient space so that the button can be pushed.

5.1 Parts affected

5.1.1 Parts removed

In case you are going to replace the existing airspeed indicator, altimeter, OAT indicator or magnetic compass, remove them according to the table below.

Part description	Technical Standard Order	Remark
Airspeed indicator	ETSO-C46a or equivalent	Removal as per operators' discretion
Altimeter	ETSO-C10b or equivalent	Removal as per operators' discretion

OAT sensor/indicator	None	
Magnetic compass	ETSO-C7b or equivalent	Removal allowed as per operators' discretion, if the LXNAV compass module is installed

5.1.2 Parts installed

For installation of ADI2 you will need:

Part description	Software release	Remark
ADI2	FW 2.0	Software not field loadable (non FLS): firmware updates only by LXNAV or authorized personnel. FW 2.0 is required for the compass function.
OAT probe	---	LXNAV OAT probe
LXNAV compass module	App_MAGC_4.00 or later release	Field loadable software (FLS). Installation optional as per operators' discretion
Installation material	---	Tube, cables and connectors as required
1A circuit breaker	---	Texas Instruments / Klixon 7277 Series Circuit Breaker or similar

5.2 Prerequisites

ADI2 needs to be ordered or configured to show any airspeed limitation required by the Airplane flight manual (AFM, usually section 2).



Airspeed indicator layout for arcs and markings according to CS 22 can be found in AMC 22.1545 or in Chapter 9.4.3.3 of this manual.

An additional electronic flight display (e.g. electronic variometer, navigation computer or final glide calculator) needs to be installed and configured to be able to show indicated Airspeed (IAS) and barometric altitude simultaneously on one page. To reduce the probability of failure of both systems at the same time, this additional system shall not be an ADI2, as well.



Recommended devices for additional flight display are following: LX90xx or LX80xx series and S-vario series. This list is not complete; installer needs to check each system installed on the aircraft for the suitability

The electrical system must be able to cope with the additional load. This regards to the capacity of the batteries, the cross sections of the wires and the fuses. In powered sailplanes with battery ignition system, the capacity of the batteries and generators must be large enough to meet the simultaneous demands of the engine ignition system and the greatest demands of any other electrical system components that draw from the same source.
The maintenance manual instructions regarding the pneumatic lines and ports must be followed. After work on the pneumatic installation, the system must be checked for tightness. The equipment must securely be attached in the sailplane, must neither endanger the pilot, nor hinder bailing out, nor weaken the structure.

5.3 Installation Process

Installation shall be in instrument panel, consistent with the existing cockpit layout. Any limitation from Maintenance instructions applies (e.g. Panel weight). As this instrument is the

most important instrument for a (powered) glider, it should be placed in a very visible place, e.g. in the top of the panel.

ADI2 needs to be wired directly to the aircraft master switch ("always on") with a resettable circuit breaker rated 1A (e.g. Texas Instruments / Klixon 7277 Series Circuit Breaker or similar). This circuit breaker must not be connected to any other system required for safe flight, explicitly not connected to the electronic device used as backup system.

No alteration to pitot or static ports of the aircraft shall be made.

OAT probe shall be mounted on the measuring spot foreseen by the Airframe manufacturer.

If a compass module is installed, install, connect and calibrate it according to chapter 7.2. The existing magnetic compass may be removed only when the compass module is installed and calibrated. Removing the magnetic compass changes the aircraft mass and balance.

For general purpose and structural considerations, use FAA Advisory Circular AC43.13-1B+2B.

"INSTALLATION OF BASIC FLIGHT INSTRUMENTS" Standard Change CS-SC401d can be used as approved data, if Maintenance Manual or similar approved data (Technical Notes TN) do not contain sufficient information

5.4 Post Installation Configuration, Checkout, and Documentation

- Check that Airspeed Markings / Arc are in line with basic Airplane flight manual AFM and applicable Type Certificate Data Sheet (TCDS).
- Check that measuring range of Airspeed indicator is at least 1.05 times Vne
- Check Backup instrument is in working condition and configured to be able to display IAS and Altitude simultaneously
- Perform a pitot-static test in accordance with FAR 43 Appendix E for the ADI2 and the backup instrument.
- Perform aircraft weighing according to Flight or Maintenance manual, if needed. Update the AFM and placards accordingly
- Add Flight manual supplement "Electronic Airspeed indicator + Altimeter ADI2" to AFM, Issue 2, 14.06.2026 or later.
- If a compass module is installed: calibrate the compass (chapter 7.2.3) and check the indicated magnetic heading for plausibility, e.g. against the runway direction.
- If a compass module is installed: add the placard "Compass is „Auto calibrate", no deviation table required".
- Update Aircraft documentation (e.g. STC/Alteration list, equipment list, weighing report)
- Release aircraft to service according to applicable requirements. Note: This STC is not suitable for the release to service of the aircraft by the pilot-owner

Note to certifying staff: According to Regulation (EU) 2021/699 and 21.A.307 (c):

(c) Parts and appliances listed in point (b) are eligible for installation in a type-certified product ***without being accompanied by an EASA Form 1****, provided that the installer holds a document issued by the person or organization that manufactured the part or appliance, which declares the name of the part or appliance, the part number, and the conformity of the part or appliance with its design data, and which contains the issuance date.*

Therefore, ADI2 can be installed and released without being accompanied by an EASA Form 1

5.5 Cut-out

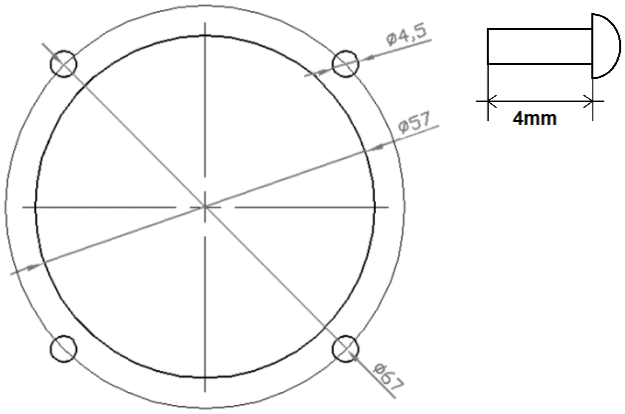

Bottom right hole should be at least 6 mm in diameter!

6 Test of the pitot-static system



To avoid rupturing the diaphragm of the airspeed indicators and altimeters, apply pressure slowly and do not build up excessive pressure in the line. Release pressure slowly to avoid damaging the airspeed indicators and altimeters.

Never apply vacuum (low pressure) to the Pst port alone when performing the altimeter test.



If vacuum is applied only to the Pst port while the Ptot port remains at ambient pressure, the resulting pressure differential will be applied across the airspeed sensor or diaphragm. This will exceed the sensor's rated range and **permanently damage the differential pressure sensor**.

Note: An altitude reading of about 400 m (50 hPa) already corresponds to an airspeed of 325 km/h, the full range of the standard ADI2 airspeed sensor. Do not exceed it during the test; 800 m (100 hPa) would already exceed the permissible differential pressure for virtually all airspeed indicators installed in gliders and motor gliders.

6.1 Static system leak test

Connect the static pressure openings (P_{static} port) to a tee to which a source of pressure and manometer or reliable indicator is connected.

Do not blow air through the line toward the instrument panel. This may seriously damage the instruments. Be sure to disconnect the instrument lines so no pressure can reach the instruments. Seal the disconnected lines.

Apply a vacuum equivalent to 1000 feet/300 m altitude, (differential pressure of approximately 14.5 inches/363 mm of water or 35.6 hPa) and hold.

After 1 minute, check to see that the leak has not exceeded the equivalent of 100 feet/30 m of altitude (decrease in differential pressure of approximately 1.43 inches/36 mm of water or 3.56 hPa).

6.2 Static system test

Connect suction (vacuum) on **both** static opening (P_{static} port) and pitot opening (P_{total} port). This way you will protect airspeed sensor and also other pneumatic airspeed indicators to be damaged due to the high differential pressure.



Max differential pressure range for ADI2 is +- 50hPa/20 inches of water.
Maximum proof pressure, that should never exceed is **500 hPa** or 14.7inch of mercury.

6.3 Pitot system leak test

Connect the pitot pressure openings to a tee to which a source of pressure and manometer or reliable indicator is connected.

Apply pressure to cause the airspeed indicator to indicate 150knots/278km/h (differential pressure 14.9 inches/378 mm of water or 37 hPa), hold at this point and clamp off the source of pressure. After 1 minute, the leakage should not exceed 10knots/18.5km/h (decrease in differential pressure of approximately 2.04 inches/51.8 mm of water or 5.08 hPa).

6.4 Pitot system test

Connect pressure on pitot pressure openings (P_{total} port). Start carefully increasing the pressure. When stabilized, compare with reference. The measurement repeats at different points (airspeeds).

Note: Further details regarding the functionality of the Pitot-static system and the execution of tests on these systems can be found in FAA AC 43.13-1B CHG 1, Section 4 12.51 – 12.63.

7 Compass

7.1 Technical Data

- Power input 12 V DC via CAN bus
- Consumption at 12 V: 70 mA
- 56 x 40 x 15 mm
- Weight Approx. 100 g

7.2 Installation

7.2.1 Location requirement

- The location should be magnetically benign.
- As far as possible from metal parts, power cables
- Small magnetic interferences can be compensated by the user calibration.
- Very important is orientation of the magnetic compass (compass has marked TOP position and flight direction position).

7.2.2 Connecting

Compass module must be connected to CAN bus cable, which is part of ADI2 harness. It must be installed in a place without strong magnetic fields (Irons or ferromagnetic materials), cables with AC current or not constant DC currents.

When installing magnetic compass use screws made of non-ferromagnetic materials (plastic or brass)

When installing a magnetic compass, the main device should be switched off, otherwise it will not be detected.

Older models of ADI2 have no CAN bus cable. In case you want to use a compass, please order new harness.



Orientation of compass module marked on housing as on picture above.

7.2.3 Calibration

When a compass is connected to the system please enter in the setup menu to perform calibration of compass. Compass calibration is in the Installation menu. If no compass is detected, the message "No compass detected on CAN bus." is shown.



Before calibration, please make sure that compass is installed properly.



It is very important that compass is installed away from power cables, other compasses, speakers and all other magnetic components in the aircraft. Keep maximum possible distance to such components (at least 30 cm).

Align Pitch & Roll – use it because the compass module is never mounted perfectly leveled. With the glider levelled, press it to set the current roll and pitch of the module as level. This is the first step needed in calibration process.

Press **Start Calibration** to start calibration of compass on the ground. Calibration process is very straightforward. Make sure glider fuselage is levelled (use tail dolly), wings are levelled and canopy is closed with pilot inside. Switch on all the avionics, which is normally switched on while flying. Assistant on the wing should slowly rotate glider with wings levelled in the clockwise direction. The ADI2 shows "Rotate compass slowly in clockwise direction." and the progress. Stop cancels the calibration.



Keep rotating the glider until the progress reaches 100%. The ADI2 then asks "Calibration done. Save data?". Press Save Calibration to keep the new data ("Calibration saved to device." is shown) or Discard to keep the old data. Check the compass directions afterwards; they should be within ±2 degrees. Press PTT on the radio to see if there is any deviation in magnetic heading.



If more error is observed install compass in different place and repeat calibration procedure.
Magnetic variation – enter the local magnetic variation (-30° to +30°). The ADI2 then shows the true heading. Enter east variation as a positive value and west variation as a negative value.
Roll and **Pitch** show the current attitude of the compass module.

7.2.4 Troubleshooting

Problems and what to do:
"No compass detected on CAN bus." – the ADI2 does not receive data from the compass module. Check the cable and the connectors between the compass module and the ADI2 (CAN bus, see Pinout).
Heading shows no value – no heading data from the compass module. Check the connection as above.
Heading has a constant offset – check the Magnetic variation setting.
Heading error larger than ±2° – make sure the compass module is away from power cables, speakers and other magnetic components, then repeat Align Pitch & Roll and the calibration.
Heading changes when equipment is switched on or the radio transmits – the compass module is too close to that equipment or its cables. Move the module and repeat the calibration.
Repeat the calibration after the compass module is moved, after equipment is installed or moved near it, and whenever the heading error is larger than ±2°.

8 System description

8.1 Rotary push knob

ADI2 has one rotary push knob. Knob can be rotated CCW and CW to select QNH, to navigate through menus or to select a value. It also has push functionality and detects short or long presses. A short press means just a click; a long press means pushing the button for more than one second.

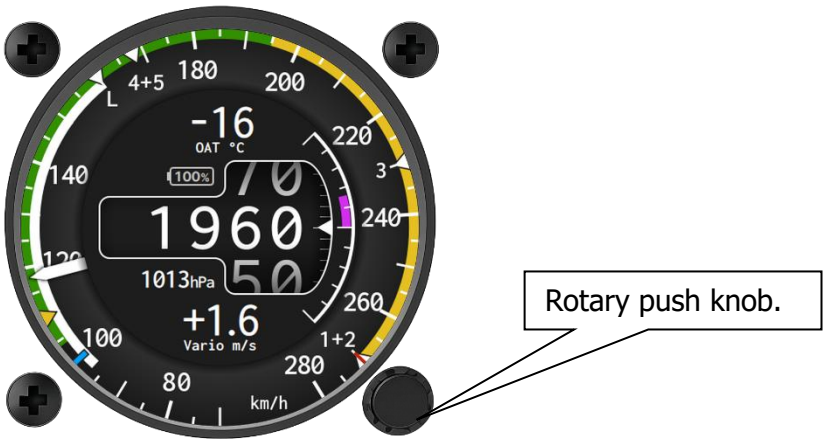

8.2 Switching on the unit

There is no special action required to switch on the unit. When power is applied to the device, it will switch on and will be ready for immediate use.

8.3 User input

The user interface consists also of dialogues which have various input controls. They are designed to make the input of names, parameters, etc., as easy as possible. Input controls can be summarized as:

- Radio on/off button,
- Selection control,
- Spin control,
- Slider control,
- Text inputs

8.3.1 Navigating menu and dialogs

Once in a menu or dialog you can select an item rotating knob in both directions. Once on the desired item, press the knob to enter a submenu, edit mode or toggle selection.



Uppermost selection is dialog name and bottom selection is back. Select this item to go back to previous menu or long press the knob to exit.

8.3.2 Radio on/off button

A radio button enables or disables an option. Press knob to toggle selected option. If an option is enabled radio button will move to the right and background will be colored green.



8.3.3 Selection control

Selection control is used to select a value from a list of predefined values. Press knob button to see all the options. Currently selected value will have a checkmark next to it. You can select an option with rotating the rotary knob. Press knob to confirm selection or select Back to return without changes.

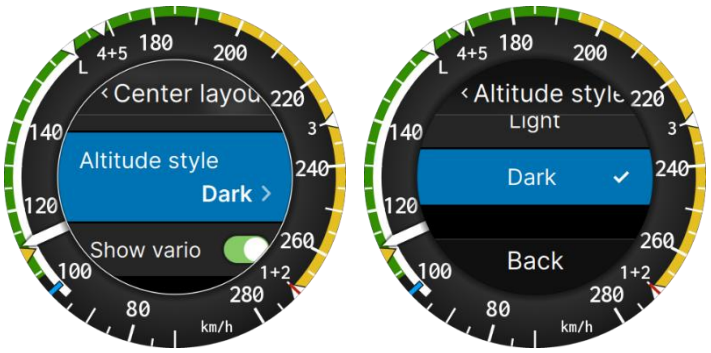

8.3.4 Spin control

Spin control is used to select a numerical value. Press knob to enter edit mode. Currently selected value will be highlighted in blue. Use rotary knob to increase or decrease value. Confirm selection with short press on knob. Long press knob to cancel selection and exit without changes.

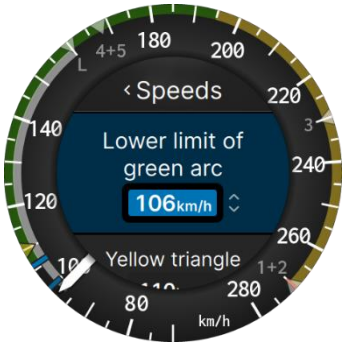

8.3.5 Slider control

Some values, such as volume and brightness, are displayed as a slider.



Press knob to enter edit mode. Slider background colour will change. Use rotary knob to increase or decrease value. Confirm selection with short press on knob. Long press knob to cancel selection and exit without changes.

8.3.6 Text controls

When entering a text. A list with all the options will be shown around the screen. Select a letter or any other option to enter required text. Press Abc symbol to toggle between entering letters, digits and/or symbols.



Press and rotate knob to move between the input letters. Confirm selection with checkmark symbol and cancel changes with X symbol.

9 Operating modes

The ADI2 has only one main screen which indicates airspeed, altitude and QNH setting. When rotating the rotary knob QNH is adjusted. Long press on the rotary knob will open the menu, which has timeout and will be closed after 10 seconds.

9.1 Main screen

The primary function of the ADI2 is to display indicated airspeed and altitude. Indicated airspeed is displayed with needle on a customizable dial. See chapter 9.4.3.3 how to customize speed markings on the dial.

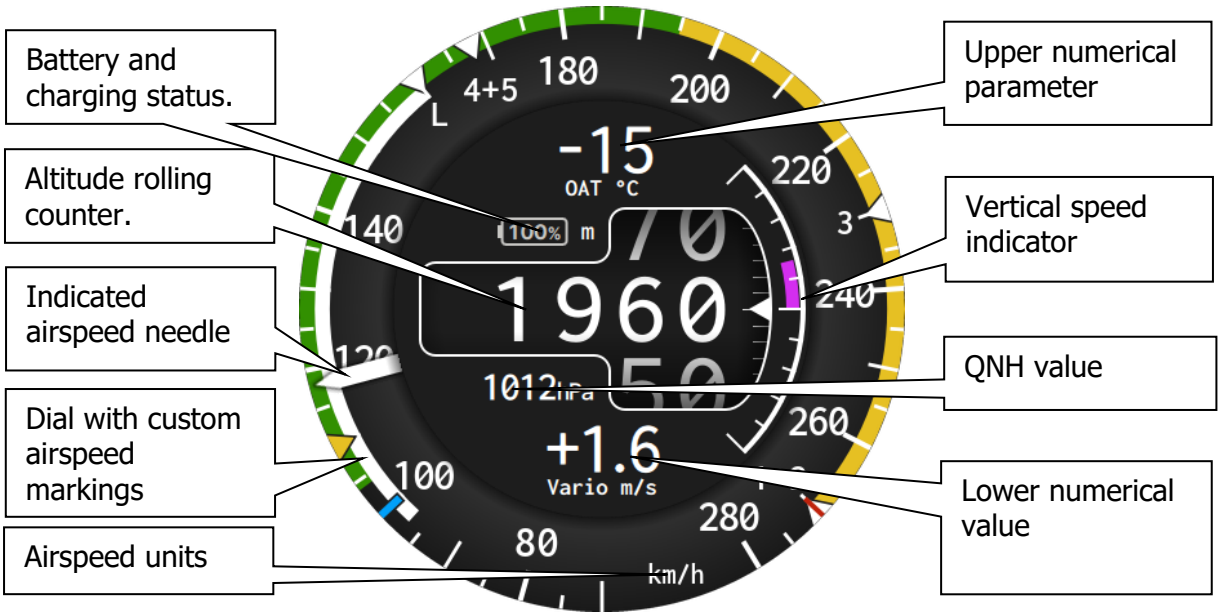

In the middle of the screen the altitude is displayed as a rolling counter; its unit (m or ft) is shown above it, next to the battery symbol. On the right side vertical speed is drawn as a magenta bar (on the left side with a spiral scale starting at the top). It can be switched off in the Layout menu (Center layout – Show vario). Additionally, two numerical values can be shown. See chapter 9.4.2 how to customize main screen.
If the airspeed sensor delivers no data, AIRSPEED FAIL is shown on the dial. If the altitude sensor delivers no data, ALTITUDE FAIL is shown in the center.
If a compass module is connected, heading can be shown in the upper or lower field, as a number or as a compass arc over the top or bottom of the dial. See chapter 9.4.2.



Heading as compass arc at the top, as compass arc at the bottom, and as a number.

9.2 QNH changing

If you rotate rotary knob, QNH value will be highlighted and blue ring will be drawn around altitude indication. Rotate knob to the right to increase QNH and left to decrease QNH. Changes are going to be seen immediately. On the ground the knob changes the indicated altitude in steps (10 ft, or one step of the metric altitude unit) and the QNH follows; in flight the knob changes the QNH in steps of the pressure unit. The QNH range is 900 to 1100 hPa.



Highlight area will disappear automatically after 3 seconds of inactivity.

9.3 Battery indication

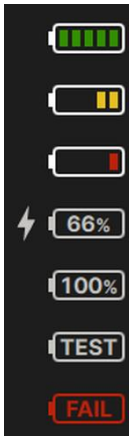

Above the altitude display internal battery status is displayed. On power-up automatic test of the battery is performed and message TEST is shown inside the battery. If battery is not ok and requires a service, message FAIL will be shown and it will be colored red. Please contact us for service. If battery is charging, a charging symbol will be shown next to battery symbol and inside the battery percentage of charge level will be shown.
When the unit runs on external power, the battery frame is grey and shows the charge level of the internal battery in percent.
When the unit runs on the internal battery, the bars show the remaining time: 5, 4 or 3 green bars – more than 180, 120 or 60 minutes; 2 or 1 yellow bars – more than 40 or 20 minutes; 1 red bar – less than 20 minutes.
If no battery data is available, a grey battery with a question mark is shown.

9.3.1 Power loss in flight

ADI2 cannot be switched on without external power. What happens when external power is lost depends on whether the aircraft is airborne:

In flight (airspeed detected)
ADI2 automatically switches to its internal battery, and the battery indicator on the screen changes. ADI2 keeps working until:

- the internal battery is empty, or
- the aircraft has landed: when airspeed drops to zero, ADI2 switches off after 3 seconds.

Land as soon as possible!

On the ground (no airspeed)

ADI2 switches off 3 seconds after external power is lost.

9.4 Setup mode

Long press the knob to enter setup mode. Setup is used to configure your ADI2.

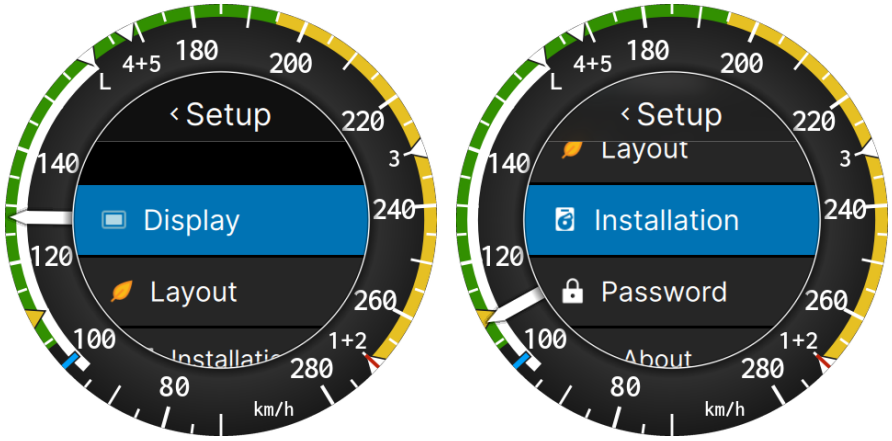

A setup menu with following options will be displayed:

- **Display** – use this menu to set brightness of the screen
- **Layout** – Customize numerical parameters and set theme colors
- **Installation** – used by authorized personnel to do initial setup of speed markings, scale, units and compass
- **Password** – service codes, only for service or manufacturer.
- **About** – shows version info and serial number.

9.4.1 Display

Use this menu to set brightness of the screen

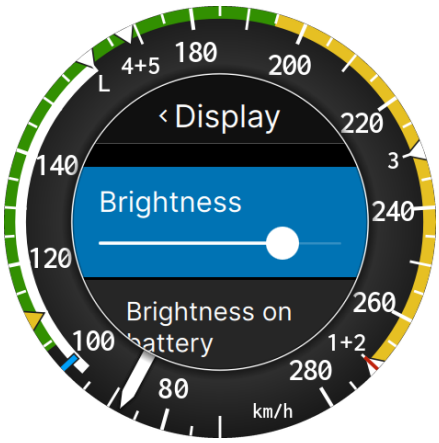

Brightness sets the screen brightness when the unit runs on external power.
Brightness on battery sets the screen brightness when the unit runs on the internal battery. It cannot be set higher than Brightness.

9.4.2 Layout

Layout opens the main screen in edit mode. The selected item is marked on the screen. Rotate the knob to move between the items in this order: upper field, lower field, center and ring. Press the knob to change the selected item. Rotating up past the upper field selects the title bar (Layout), rotating down past the ring selects the Back button; press either one, or long press the knob, to leave the Layout menu. The menu also closes after 10 seconds without input, except while the data of a field is being changed. Every change is shown on the main screen immediately and is saved.

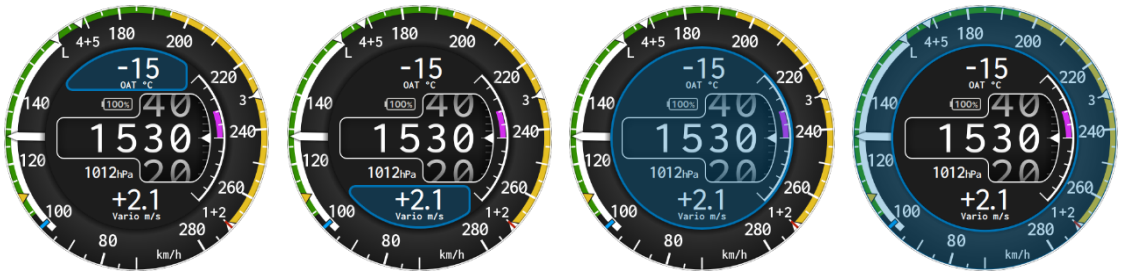

Layout edit mode: upper field, lower field, center and ring selected.



Center layout and Speed layout menus; light center with heading and TAS; scale origin at the top.

9.4.2.1 Upper and lower field

Select the upper or the lower field and press the knob. Rotate the knob to scroll through the data; the field shows the selected data immediately. Press the knob to confirm the selection, long press to cancel and keep the previous data. Data that can be shown:
None – the field is empty.
Vario – current vertical speed.
Alt – altitude above mean sea level (QNH altitude).
Alt (other unit) – altitude above mean sea level in the other altitude unit: in ft when the altitude unit is m, in m when it is ft. The field shows the unit.
FL – flight level (pressure altitude at 1013.25 hPa).
TAS – true airspeed.
OAT – outside air temperature.
Battery – supply voltage of the ADI2.
IAS – indicated airspeed.
QFE – height above takeoff.
QNH – current QNH setting.
Hdg (number) – heading as a number. Needs the compass module.
Hdg (compass arc) – heading as a compass arc along the top of the dial (upper field) or along the bottom of the dial (lower field). Needs the compass module.

9.4.2.2 Center

Select the center and press the knob to open the Center layout menu:
Background style – Light or Dark background of the center of the dial.
Altitude style – Light or Dark background of the altitude counter.
Show vario – On shows the vertical speed bar next to the center, Off hides it.

9.4.2.3 Ring

Select the ring and press the knob to open the Speed layout menu:
Color style – Light or Dark background of the airspeed scale.
Needle color – color of the airspeed needle: Red, Orange, Yellow or White. The menu shows a sample of the selected color.

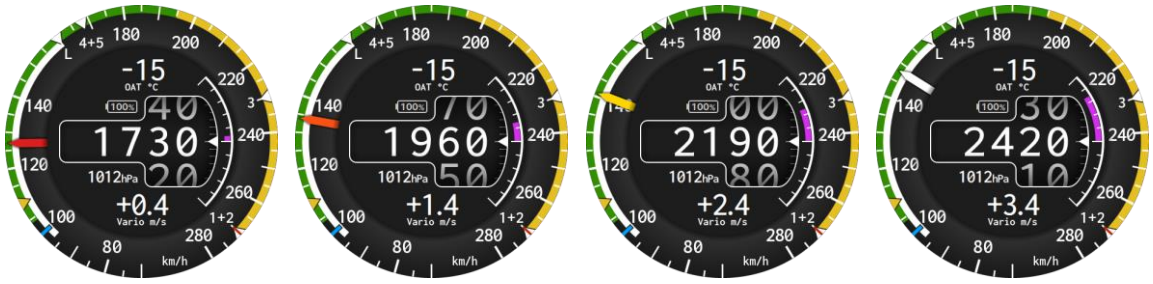

Needle color red, orange, yellow and white.





All dark, light ring, light center background, light altitude counter, vario bar off.

9.4.3 Installation menu

Installation menu is password protected with unique password for each device. Installation menu is meant to be used by a skilled and authorized personnel to enter speed arcs and markings.

As long as the speeds are at their factory values, the Installation menu opens without a password. After the speeds have been set, the password is required; it is asked once after each power-up. The password is provided with the unit and may only be used by authorized personnel to access the menu and modify settings.

Select Installation menu item and enter the 6-character password provided in the menu row. A wrong password shows "Incorrect code."



Once a correct password is entered a menu will open with following options

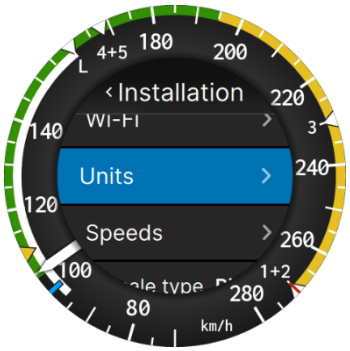

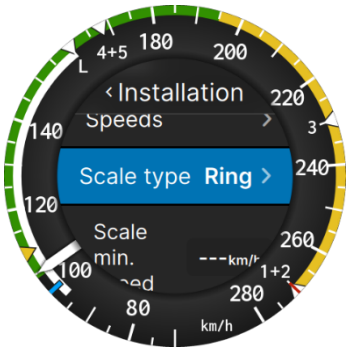

Wi-Fi – only for the manufacturer.
Units is used to define in which system of measure ADI2 is operating
Speeds menu item is used to define speed arcs and markings according to the flight manual
Scale type selects the airspeed scale: Ring, Logarithmic or Spiral.
Scale min. speed defines the speed at the start of the scale.
Scale origin defines where the start of the scale is on the dial (top or bottom).
TAS method defines how TAS is calculated.
Vario filter is used for sensitivity of the variometer indication
Temp. offset – compensates an OAT offset if required.
Compass calibration is used to calibrate the compass module.
Altitude offset is used to correct the indicated altitude.
Altitude step sets how finely the altitude counter rolls (only with the altitude unit m).

9.4.3.1 Wi-Fi

This menu is designed only to be used by service or manufacturer.



Not to be used by user.

9.4.3.2 Units

In this menu you can define system of measure for all the data. Select from predefined sets or change each unit separately.
Rows of the Units menu:
Units system – Metric, Imperial or US Customary sets all units at once. A unit changed afterwards in the rows below overrides the selected set.
Altitude – m or ft.
Speed – km/h, kts, mph, m/s or fpm. Used for the airspeed and the speed scale.
Vertical speed – m/s, kts or fpm.
Temperature – °C or °F.
Pressure – mbar, mmHg, inHg or hPa. Used for QNH.
UTC offset – difference between local time and UTC, from -12 to +14 hours in steps of 15 minutes. The ADI2 currently shows no time, so this setting has no visible effect.

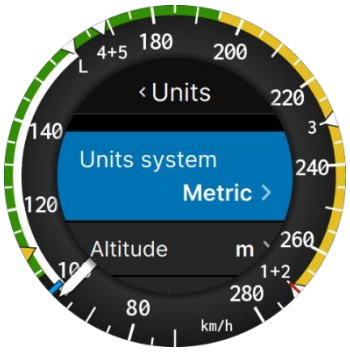

9.4.3.3 Speeds

In this menu user can define speed arcs and markings according to CS 22 as in AMC 22.1545. Please refer to airplane flight manual (usually Section 2) for speeds. Please refer to Airplane Flight Manual (usually Section 2) for correct Arcs. The following image is for illustrative

purposes only. A scale with more than 360° can be shown with the Spiral scale type (see Scale type below).

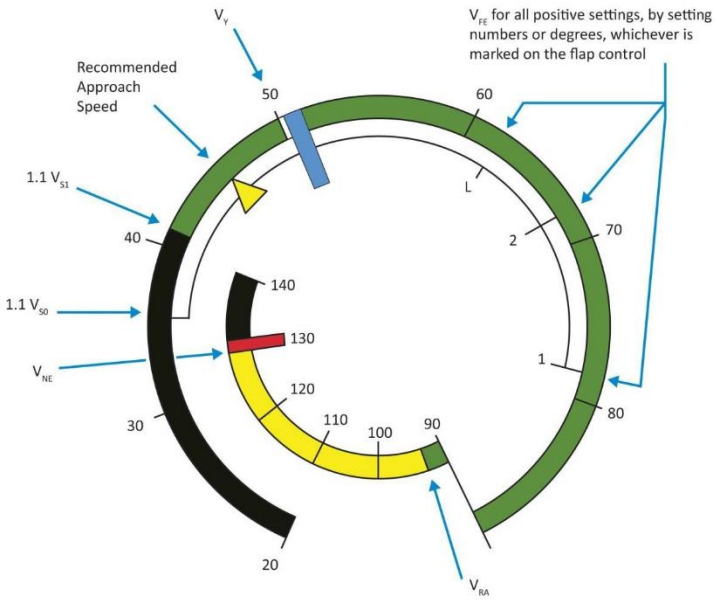

Following speeds shall be entered:

Menu	Description	Remark
Lower limit of white arc	1.1 times stall speed in landing configuration (V_{SO})	If the aircraft has no (trailing edge) flaps, set the same value as the upper limit of the white arc
Lower limit of green arc	1.1 times stall speed in defined flap setting (usually "0") (V_{S1})	
Yellow triangle	Recommended approach speed	
Blue radial line	Best rate of climb (powered flight) (V_Y)	Leave blank in a glider
Upper limit of white arc	Maximum Flap Extended Speed (V_{FE})	Leave blank, if Aircraft is not equipped with (trailing edge) flap
Limit between green/yellow arcs	Rough Air Speed (V_{RA})	
Red radial line	Never exceed speed (V_{NE})	

Rotate the knob to select a speed, press it and enter the value from aircraft flight manual.

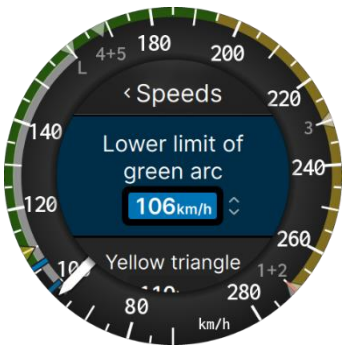

Additional markings can be entered for example different maximum flap speeds for various flap settings. Press Add to add a new marking. In the Edit Marker dialog enter the Label and

the Speed, and select the Symbol. Available symbols are white triangle, yellow triangle, red line, yellow line, white line or none. The label can have up to 8 characters. Select an existing marking to change or delete it.

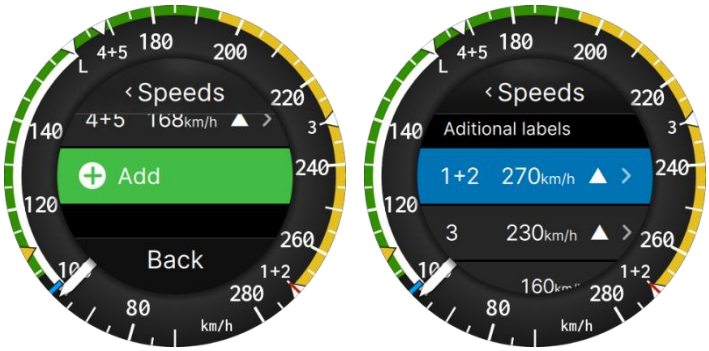

Example: a spiral scale from 20 km/h with flap speed markings 1+2, 3, L and 4+5 (white triangles).



If the glider has no flaps (no white arc), set the same value for both the lower and upper limits of the white arc so that the white arc does not appear.

9.4.3.4 Scale type

Selects the type of the airspeed scale:
Ring – linear scale, up to one full turn of the dial.
Logarithmic – more space for low speeds, less space for high speeds.
Spiral – the scale continues in a second turn inside the first one. Use it for a wide speed range.



Ring, logarithmic and spiral scale with the same speeds.

9.4.3.5 Scale min. speed

Defines the speed at the start of the scale. Auto sets it to the lower limit of the white arc minus 20 (in the selected speed unit), rounded down to a multiple of 10. With the logarithmic scale, Auto selects the start of the scale automatically. The value cannot be higher than the lower limit of the white arc. In the menu, Auto is shown as "---".

9.4.3.6 Scale origin

Airspeed scale origin can be either at the top or at the bottom of the dial. Use this menu to define its position.

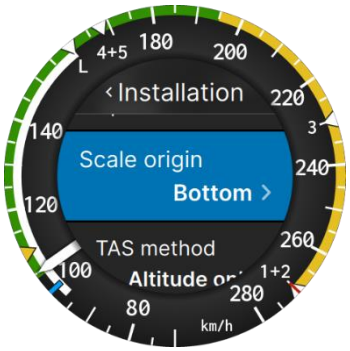

9.4.3.7 TAS method

Select how the true airspeed (TAS) is calculated:
Altitude only – uses the standard temperature profile with altitude. Use it only if the OAT probe is not mounted or does not work properly.
Alt. and OAT – takes into account the density change due to altitude and temperature.
Alt., OAT, Comp. – also takes into account the compressibility of the air. Use it for faster aircraft.

9.4.3.8 Vario filter

Vario filter value defines response of the vertical speed indication. Higher value of filter gives a slower, smoother vertical speed indication. The range is from 0.1 to 5.0 s.



The range of the vertical speed indicator scale depends on what unit is set in the **Setup** > **Installation > Units** > **Vertical speed** menu. You can choose between **fpm**, **m/s** or **kts**. The full scale of the bar is 5 m/s, 10 kts or 1000 fpm.

9.4.3.9 Temperature offset

A temperature offset can be defined here. Temperature offset is same for the whole temperature range. Temperature offset should be set on the ground. If temperature indication in the air is not ok, you should consider relocating OAT probe. The range is from -10 to +10 °C.

9.4.3.10 Compass calibration

Opens the compass calibration. See chapter 7.2.3.

9.4.3.11 Altitude offset

Corrects the indicated altitude. The current indicated altitude is shown next to the item name. Set it on the ground at a known elevation with the correct QNH.

9.4.3.12 Altitude step

Sets how the altitude counter rolls when the altitude unit is m:
Fine – the counter rolls in steps of 2 m.
Coarse – the counter rolls in steps of 10 m (default).
With the altitude unit ft the counter always rolls in steps of 10 ft and the item is not shown.

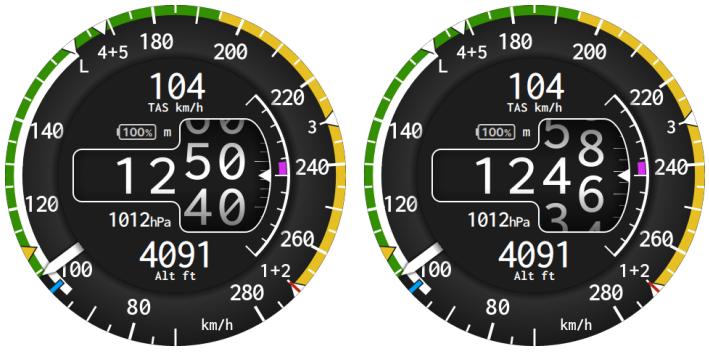

Altitude step Coarse and Fine at 1246.8 m; lower field Alt (other unit) in ft.

9.4.4 Password

This menu is designed only to be used by service or manufacturer.



Not to be used by user.

03306 – Debug settings
09969 – Factory setup (hardware info, serial number)
40000 – Set airspeed threshold (this is threshold, at which ADI switches from ground to airborne mode)
64118 – Calibration table of the pressure sensors
00111 – Diagnostics
00112 – Battery test log
66666 – CAN info (devices on the CAN bus, e.g. compass module)

9.5 About

Shows the device type, serial number, firmware version and build date. It closes after 10 seconds.



10 Instructions for continued Airworthiness (ICA)

At every airworthiness review following items should be checked:

1. Check the ADI2 is showing the applicable colored ARCs and display markings as per basic AFM and TCDS.
2. Check Backup instrument is in working condition and configured to be able to display IAS and Altitude simultaneously.
3. It is recommended to perform a Pitot-/Static test in accordance with FAR 43 App E every 12 months for ADI2 and backup instrument. Airspeed indicator readings during this test shall be within the limits of ETSO-C46a from 24th of October 2003, as shown in the table below.

Speed (IAS)			Pitot pressure		Tolerance		
knots	mph	km/h	inHg	hPa	knots	mph	km/h
50	58	93	0.1198	4.06	4	4.6	7.4
60	69	111	0.1727	5.85	2	2.3	3.7
80	92	148	0.3075	10.41	2	2.3	3.7
100	115	185	0.4814	16.30	2	2.3	3.7
120	138	222	0.695	23.54	2	2.3	3.7
150	173	278	1.091	36.95	2.5	2.9	4.6

4. It is recommended to periodically send the unit to the manufacturer or authorized representative for an inspection every 5 years to perform pressure calibration if needed.
5. Check AFM is updated containing the Airplane flight manual supplement (AFMS) "Airplane Flight Manual supplement: Electronic Airspeed indicator + Altimeter ADI2", Issue 2, 14.06.2026 (revision 19.10.2025 is permissible if no compass module is installed).

10.1 Occurrence reporting

In case of issue with the ADI2, please contact **LXNAV d.o.o., Kidričeva ulica 24, SI-3000 Celje** via telephone **+386 592 33 400** or with an email **info@lxnav.com.**

11 Revision history

Rev	Date	Comments
01	October 2025	Initial release
02	March 2026	Editorial changes
03	March 2026	Correct labeling
04	April 2026	Updated ch 3.1.3
05	April 2026	Updated ch 9.4.3
06	April 2026	Updated ch. 9.3
07	April 2026	Updated ch. 5, 9.4.3.3
08	May 2026	Added ch. 6
09	May 2026	Updated ch 3.1.1
10	June 2026	Added ch. 7 compass installation and calibration procedures
11	October 2026	Updated ch. 3, 4.1, 7.2.3, 9.1, 9.3, 9.4; added ch. 7.2.4 compass troubleshooting: scale types, compass and heading, layout, display, battery indication; editorial changes
12	November 2026	Updated ch. 5 (compass module, magnetic compass removal), 9.1, 9.4.2, 9.4.3: altitude unit, Alt (other unit), Altitude step
13	November 2026	Added chapter 9.3.1
14	November 2026	Added chapter 4.1

The pilot's choice

LXNAV d.o.o.
Kidričeva 24, SI-3000 Celje, Slovenia
T: +386 592 334 00 I F:+386 599 335 22 I info@lxnav.com
www.lxnav.com